NOTES

1. This sheet to be used with Dwg. 303, Standard Hood, Frame & Grate.
2. Walls to be 6" reinforced P.C.C. (#4's @ 12" O.C. B.W.).
3. Box may be poured in place or pre-cast.
4. Catch basin to be centered 3' from curb return at inter-section corners.
5. Stencil curb adjacent to catch basin with "No Dumping! Flows to [creek-name]" message.

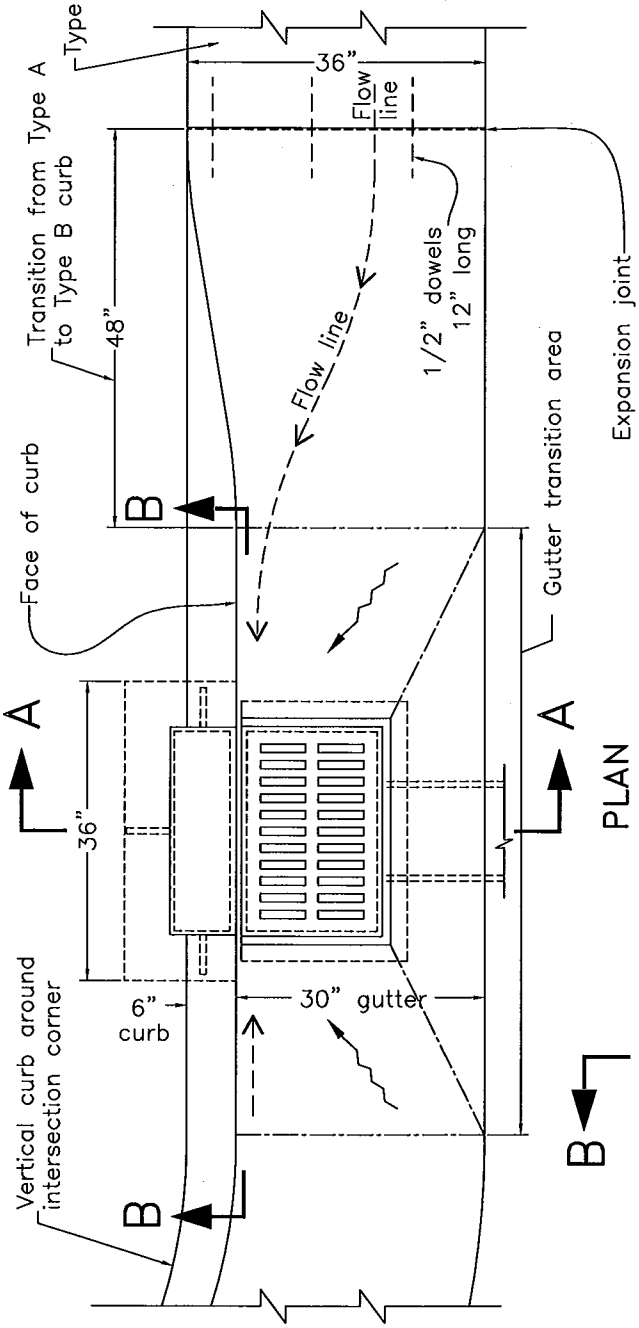


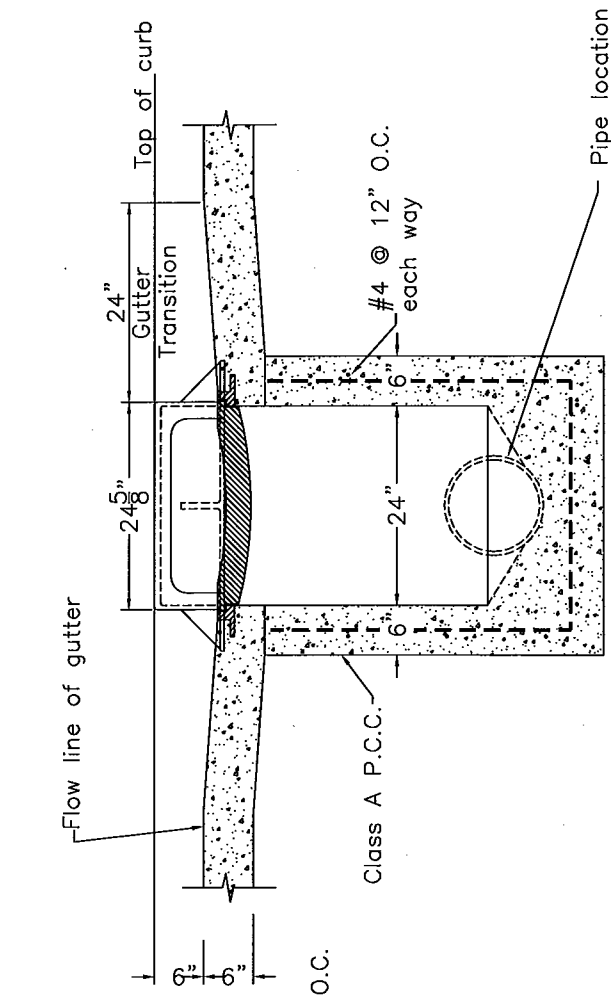


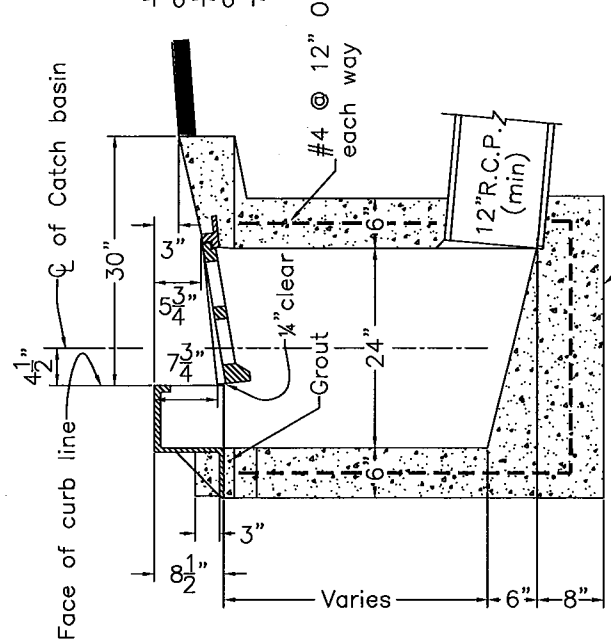


| Rev | By | Date |
|---|---|---|
| 0 | PAP | 12/14/92 |
| 1 | MAR | 01/02/02 |
| 2 | JT | 08/14/06 |
| | | |
| Scale: NTS | | |

# Catch Basin Installation Type "B" Curb

City of Palo Alto Standard

Approved by:

PE No. 35411

Date 5/14/07

Dwg No. 302

Formerly Dwg No. 13994

SD30200