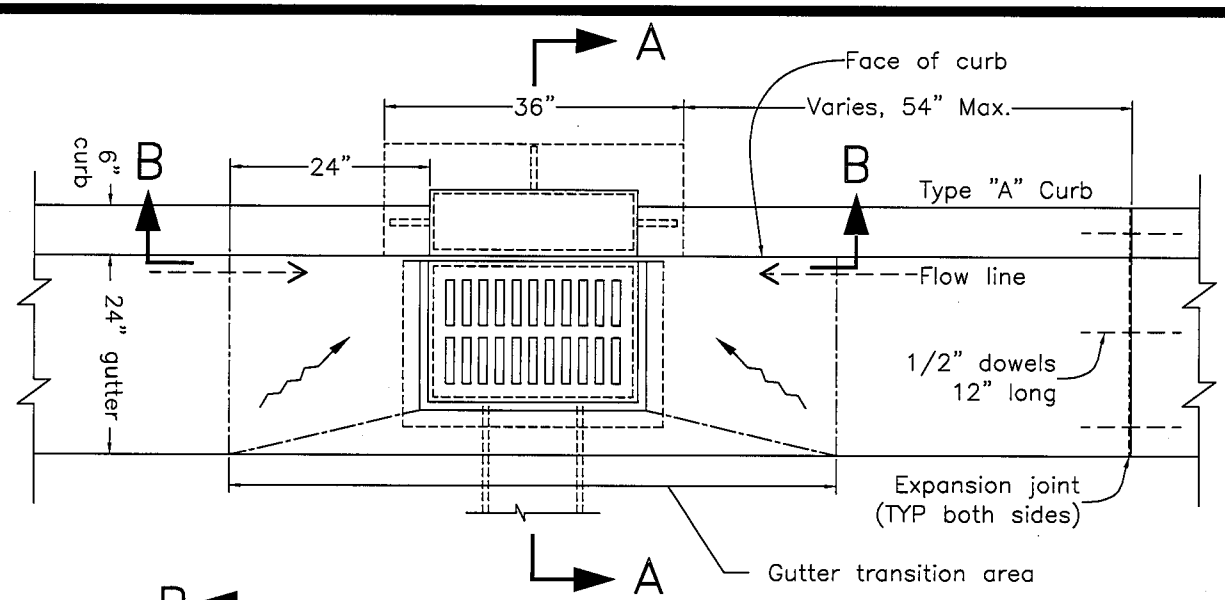

PLAN

NOTES

1. This sheet to be used with Dwg. 303, Standard Hood, Frame & Grate.
2. Walls to be 6" reinforced P.C.C. (#4's @ 12" O.C. B.W.).
3. Box may be poured in place or pre-cast.
4. Catch basin to be centered 3' from curb return at inter-section corners.
5. Stencil curb adjacent to catch basin with "No Dumping! Flows to [creek-name]" message.

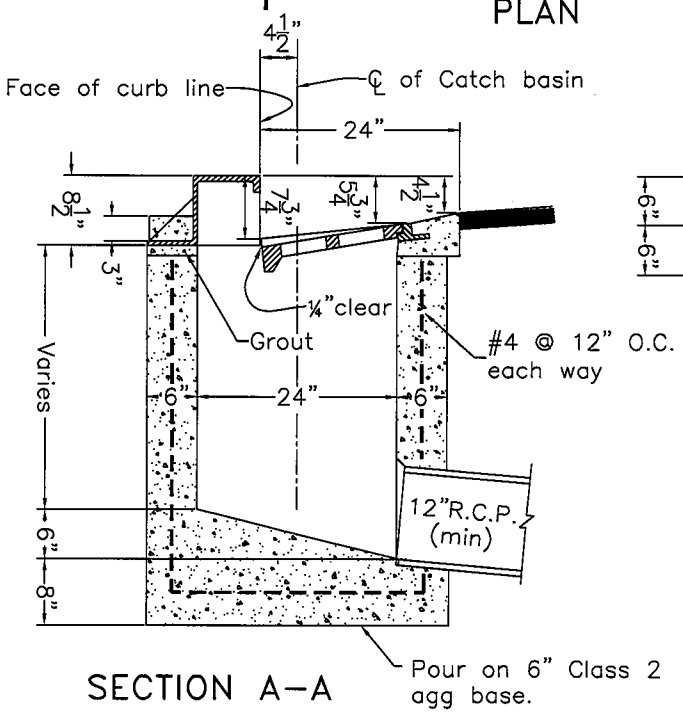

SECTION A–A

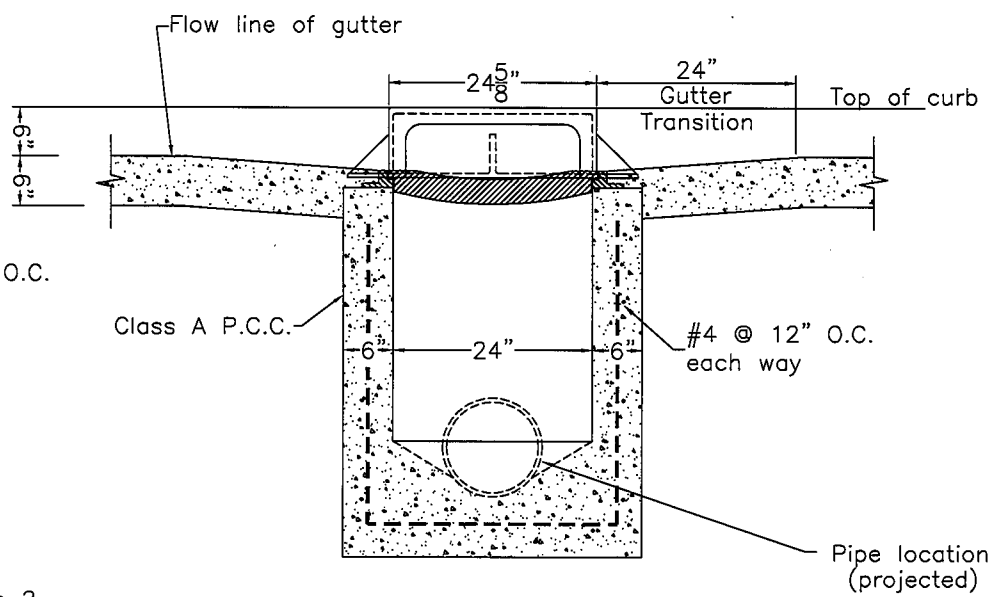

SECTION B–B

Rev	By	Date
0	PAP	12/14/92
1	MAR	01/02/02

Scale: NTS

Catch Basin Installation Type "A" Curb

City of Palo Alto Standard

Approved by: [signature]
PE No. 35411
Date 5/14/07

Dwg No. 301

Formerly Dwg No. 10152A

SD30100